LED level meter driver, 5-point, VU scale

BA6137

The BA6137 is a driver IC for LED VU level meters in stereo equipment and other display applications. The IC displays the input level (range: −10dB to +6dB) on a 5-point, bar-type LED display.
The BA6137 includes a rectifier amplifier allowing direct AC input, and has constant-current outputs, so it can directly drive the LEDs without variations in LED current due to power supply voltage fluctuations.

●Applications
VU meters, signal meters, and other display devices.

●Features
1) Rectifier amplifier allows either AC or DC input.
2) Constant-current outputs for constant LED current when the power supply voltage fluctuates.
3) Current output is optimized for red LEDs, for low power dissipation.
4) Built-in reference voltage means that power supply voltage fluctuations do not effect the display.
5) Wide operating power supply voltage range (3.5V to 16V) for a wide range of applications.
6) Low PCB space requirements. Comes in a compact 9-pin SIP package and requires few attached components.

●Absolute maximum ratings (Ta = 25°C)

Parameter	Symbol	Limits	Unit
Power supply voltage	V_{CC}	18	V
Power dissipation	Pd	800*	mW
Operating temperature	Topr	−25~+60	℃
Storage temperature	Tstg	−55~+125	℃
Junction temperature	Tj	150	℃

* Reduced by 6.4mW for each increase in Ta of 1°C over 25°C.

●Block diagram

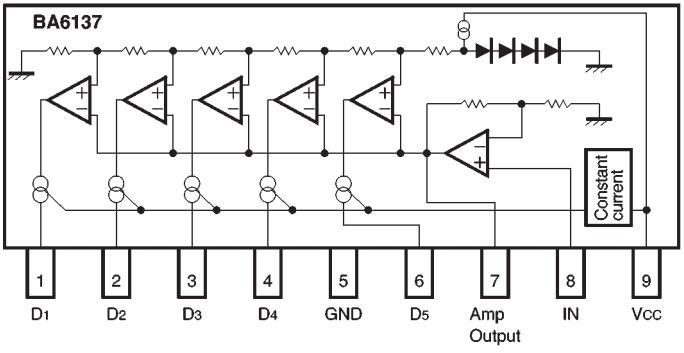

●Electrical characteristics (unless otherwise noted, Ta = 25°C, V_{CC} = 6.0V, and f = 1kHz)

Parameter	Symbol	Min.	Typ.	Max.	Unit	Conditions
Power supply voltage	V_{CC}	3.5	6	16	V	—
Quiescent current	I_Q	—	5	8	mA	V_{IN}=0V
Comparator level 1	V_{C1}	−11.5	−10	−8.5	dB	—
Comparator level 2	V_{C2}	−6	−5	−4	dB	—
Comparator level 3	V_{C3}	—	0	—	dB	Adjustment point
Comparator level 4	V_{C4}	2.5	3	3.5	dB	—
Comparator level 5	V_{C5}	5	6	7	dB	—
Sensitivity	V_{IN}	74	85	96	mV_{rms}	V_{C3} on level
LED current	I_{LED}	5	7	9.5	mA	—
Input bias current	I_{INO}	—	0.3	1.0	μA	—

●Measurement circuit

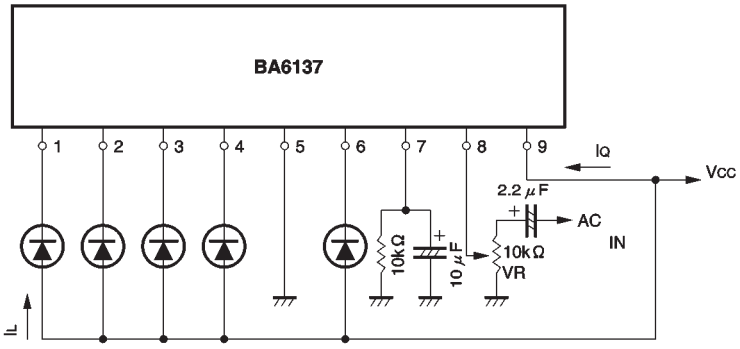

Fig. 1

●Application example

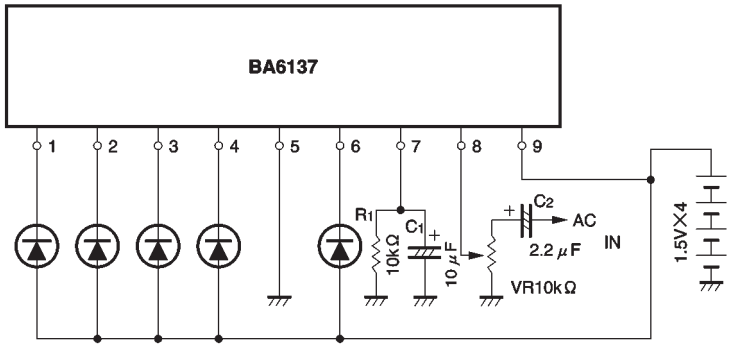

Fig. 2

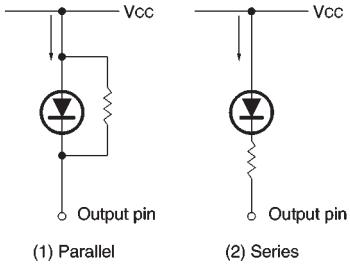

Fig. 3

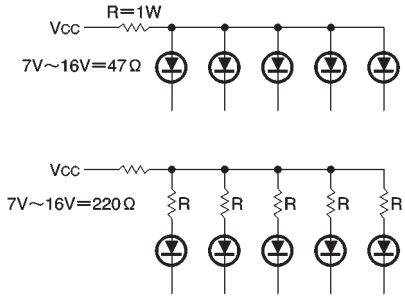

Fig. 4

The response time (attack and release time) can be changed by varying the values of C_1 and R_1 to change the time constant.
C_2 is a coupling capacitor, and VR varies the input level. Input the desired fixed voltage and adjust VR so that the LED lights at 0dB.
To reduce the LED current, connect a resistor either in parallel (Fig. 3 (1)) or in series (Fig. 3 (2)) with the LED. If a resistor is connected in series with the LED, the LED current will change if the supply voltage fluctuates.

Note: If the power supply voltage exceeds 9V, insert a resistor in series with the LED current supply line, or connect a heat sink so that the maximum power dissipation $Pd_{Max.}$ is not exceeded (see Fig. 4).

●External dimensions (Units: mm)

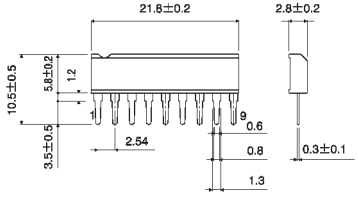

SIP9