National Semiconductor

May 1998

DS3486
Quad RS-422, RS-423 Line Receiver

General Description

National's quad RS-422, RS-423 receiver features four independent receivers which comply with EIA Standards for the electrical characteristics of balanced/unbalanced voltage digital interface circuits. Receiver outputs are 74LS compatible, TRI-STATE® structures which are forced to a high impedance state when the appropriate output control pin reaches a logic zero condition. A PNP device buffers each output control pin to assure minimum loading for either logic one or logic zero inputs. In addition, each receiver has internal hysteresis circuitry to improve noise margin and discourage output instability for slowly changing input waveforms.

Features

- Four independent receivers
- TRI-STATE outputs
- Internal hysteresis −140 mV (typ)
- Fast propagation times −19 ns (typ)
- TTL compatible outputs
- 5V supply
- Pin compatible and interchangeable with MC3486

Block and Connection Diagrams

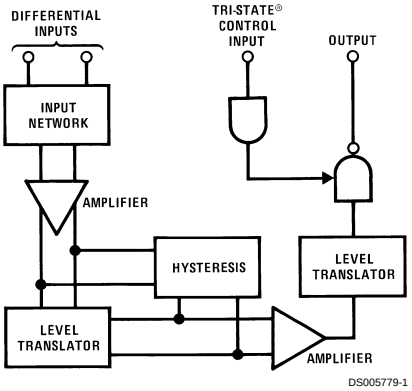

Dual-In-Line Package

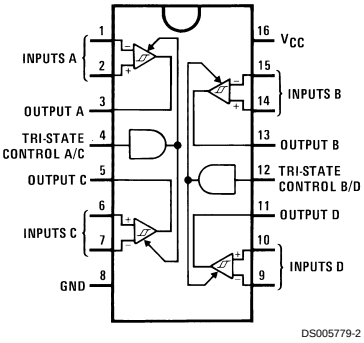

Top View
Order Number DS3486M or DS3486N
See NS Package Number M16A or N16E

TRI-STATE® is a registered trademark of National Semiconductor Corp.

Absolute Maximum Ratings (Note 2)

If Military/Aerospace specified devices are required, please contact the National Semiconductor Sales Office/ Distributors for availability and specifications.

Power Supply Voltage, V_{CC}	8V
Input Common-Mode Voltage, V_{ICM}	±25V
Input Differential Voltage, V_{ID}	±25V
TRI-STATE Control Input Voltage, V_I	8V
Output Sink Current, I_O	50 mA
Storage Temperature, T_{STG}	−65˚C to +150˚C
Maximum Power Dissipation (Note 1) at 25˚C	
Molded Dip Package	1362 mW
SO Package	1002 mW

Operating Conditions

	Max	Min	Units
Power Supply Voltage, V_{CC}	4.75	5.25	V
Operating Temperature, T_A	0	70	˚C
Input Common-Mode Voltage Range, V_{ICR}	−7.0	7.0	V

Note 1: Derate Dip molded package 10.2 mW/˚C above 25˚C. Derate SO package 8.01 mW/˚C above 25˚C.

Electrical Characteristics (Note 3)

(Unless otherwise noted, minimum and maximum limits apply over recommended temperature and power supply voltage ranges. Typical values are for T_A = 25˚C, V_{CC} = 5V and V_{IC} = 0V.)

Symbol	Parameter		Conditions	Min	Typ	Max	Units
V_{IH}	Input Voltage — High Logic State (TRI-STATE Control)			2.0			V
V_{IL}	Input Voltage — Low Logic State (TRI-STATE Control)					0.8	V
$V_{TH(D)}$	Differential Input Threshold Voltage		$-7V \le V_{IC} \le 7V$, V_{IH} TRI-STATE = 2V $I_O = -0.4$ mA, $V_{OH} \ge 2.7V$		0.070	0.2	V
			I_O = 8 mA, $V_{OL} \ge 0.5V$		0.070	−0.2	V
$I_{IB\ (D)}$	Input Bias Current		V_{CC} = 0V or 5.25V, Other Inputs at 0V				
			$V_I = -10V$			−3.25	mA
			$V_I = -3V$			−1.50	mA
			V_I = 3V			1.50	mA
			V_I = 10V			3.25	mA
	Input Balance		$-7V \le V_{IC} \le 7V$, $V_{IH(3C)}$ = 2V, (Note 5)				
		V_{OH}	$I_O = -0.4$ mA, V_{ID} = 0.4V	2.7			V
		V_{OL}	I_O = 8 mA, $V_{ID} = -0.4V$			0.5	V
I_{OZ}	Output TRI-STATE Leakage Current		$V_{I(D)}$ = 3V, V_{IL} = 0.8V, V_{OL} = 0.5V			−40	µA
			$V_{I(D)} = -3V$, V_{IL} = 0.8V, V_{OH} = 2.7V			40	µA
I_{OS}	Output Short-Circuit Current		$V_{I(D)}$ = 3V, V_{IH} TRI-STATE = 2V, V_O = 0V, (Note 4)	−15		−100	mA
I_{IL}	Input Current — Low Logic State (TRI-STATE Control)		V_{IL} = 0.5V			−100	µA
I_{IH}	Input Current — High Logic State (TRI-STATE Control)		V_{IH} = 2.7V			20	µA
			V_{IH} = 5.25V			100	µA
V_{IC}	Input Clamp Diode Voltage (TRI-STATE Control)		$I_{IN} = -10$ mA			−1.5	V
I_{CC}	Power Supply Current		All Inputs V_{IL} = 0V			85	mA

Note 2: "Absolute Maximum Ratings" are those values beyond which the safety of the device cannot be guaranteed. They are not meant to imply that the devices should be operated at these limits. The table of "Electrical Characteristics" provides conditions for actual device operation.

Note 3: All currents into device pins are shown as positive, out of device pins are negative. All voltages referenced to ground unless otherwise noted.

Note 4: Only one output at a time should be shorted.

Note 5: Refer to EIA RS-422/3 for exact conditions.

PrintDate=1998/05/29 PrintTime=12:58:30 41665 ds005779 Rev. No. 3 cmserv **Proof** 2

Switching Characteristics

(Unless otherwise noted, V_{CC} = 5V and T_A = 25˚C.)

Symbol	Parameter	Min	Typ	Max	Units
$t_{PHL(D)}$	Propagation Delay Time — Differential Inputs to Output				
	Output High to Low		19	35	ns
$t_{PLH(D)}$	Output Low to High		19	30	ns
t_{PLZ}	TRI-STATE Control to Output				
	Output Low to TRI-STATE		23	35	ns
t_{PHZ}	Output High to TRI-STATE		25	35	ns
t_{PZH}	Output TRI-STATE to High		18	30	ns
t_{PZL}	Output TRI-STATE to Low		20	30	ns

AC Test Circuits and Switching Time Waveforms

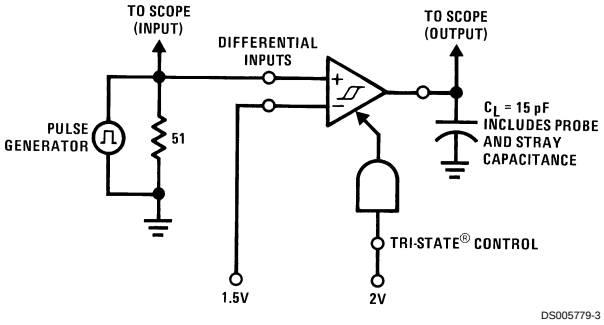

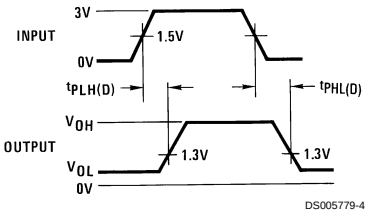

Input pulse characteristics:
$t_{TLH} = t_{THL}$ = 6 ns (10% to 90%)
PRR = 1 MHz, 50% duty cycle

FIGURE 1. Propagation Delay Differential Input to Output

AC Test Circuits and Switching Time Waveforms (Continued)

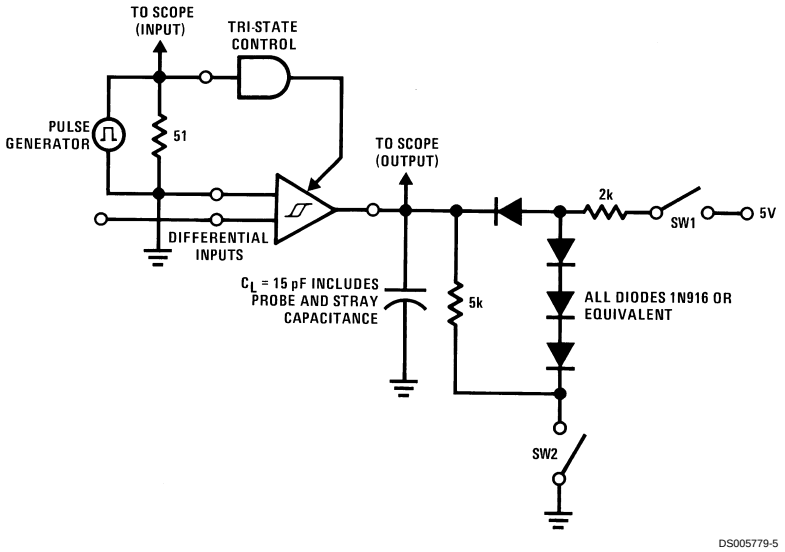

1.5V for t_{PHZ} and t_{PLZ}
1.5V for t_{PLZ} and t_{PZL}
Input pulse characteristics:
$t_{TLH} = t_{THL}$ = 6 ns (10% to 90%)
PRR = 1 MHz, 50% duty cycle

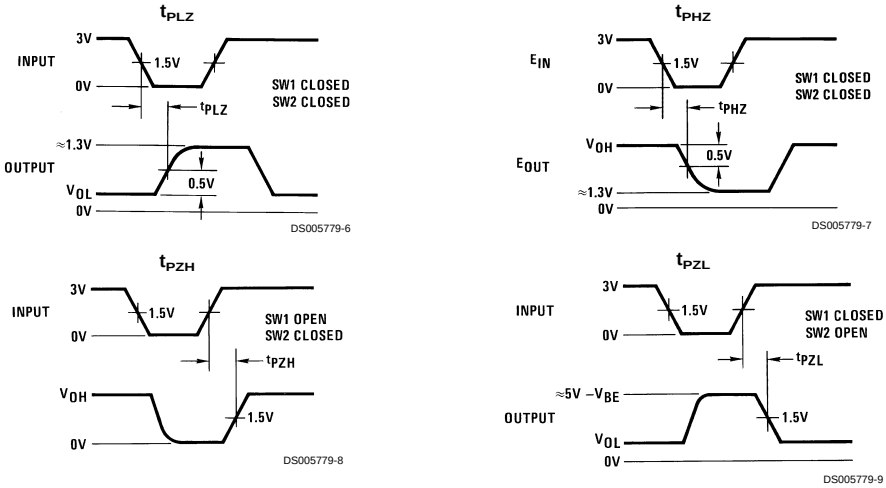

FIGURE 2. Propagation Delay TRI-STATE Control Input to Output

Book
Extract
End

PrintDate=1998/05/29 PrintTime=12:58:31 41665 ds005779 Rev. No. 3 cmserv **Proof** 4

Physical Dimensions inches (millimeters) unless otherwise noted

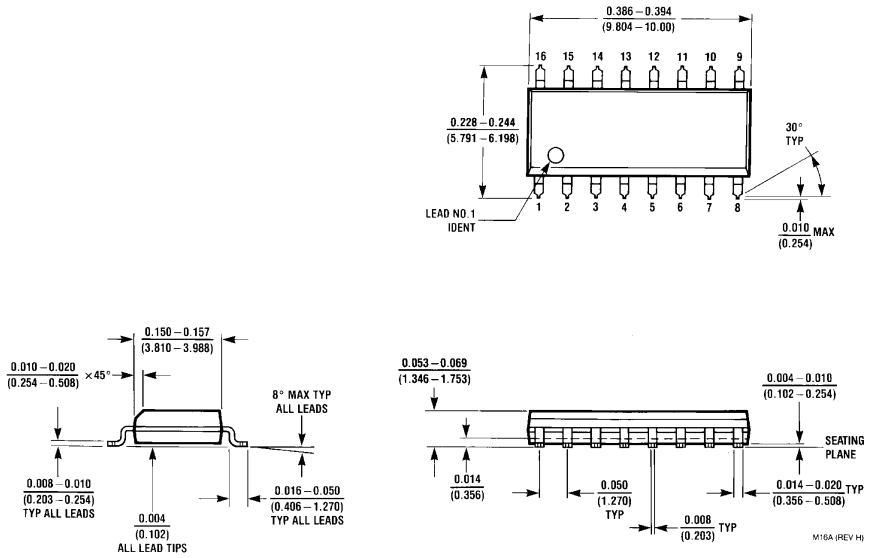

SO Package (M)
Order Number DS3486M
NS Package Number M16A

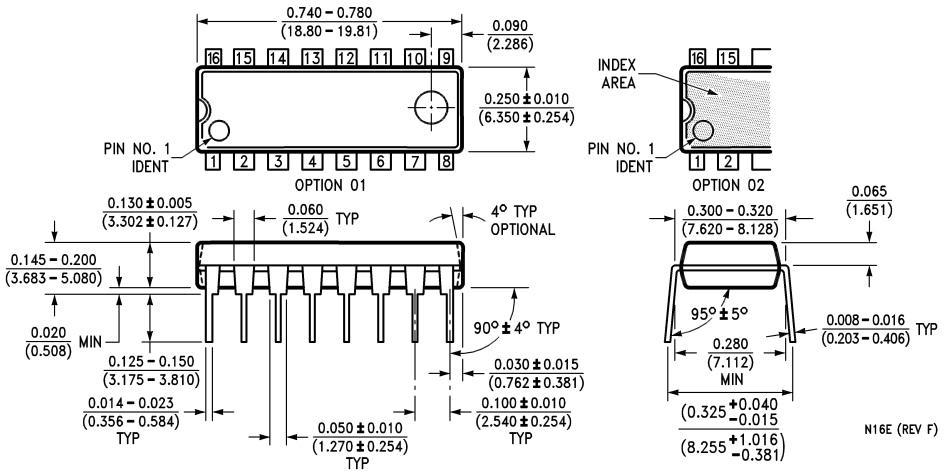

Molded Dual-In-Line Package (N)
Order Number DS3486N
NS Package Number N16E

PrintDate=1998/05/29 PrintTime=12:58:31 41665 ds005779 Rev. No. 3 cmserv **Proof** 5

LIFE SUPPORT POLICY

NATIONAL'S PRODUCTS ARE NOT AUTHORIZED FOR USE AS CRITICAL COMPONENTS IN LIFE SUPPORT DEVICES OR SYSTEMS WITHOUT THE EXPRESS WRITTEN APPROVAL OF THE PRESIDENT OF NATIONAL SEMICONDUCTOR CORPORATION. As used herein:

1. Life support devices or systems are devices or systems which, (a) are intended for surgical implant into the body, or (b) support or sustain life, and whose failure to perform when properly used in accordance with instructions for use provided in the labeling, can be reasonably expected to result in a significant injury to the user.
2. A critical component in any component of a life support device or system whose failure to perform can be reasonably expected to cause the failure of the life support device or system, or to affect its safety or effectiveness.

National Semiconductor Corporation
Americas
Tel: 1-800-272-9959
Fax: 1-800-737-7018
Email: support@nsc.com

www.national.com

National Semiconductor Europe
Fax: +49 (0) 1 80-530 85 86
Email: europe.support@nsc.com
Deutsch Tel: +49 (0) 1 80-530 85 85
English Tel: +49 (0) 1 80-532 78 32
Français Tel: +49 (0) 1 80-532 93 58
Italiano Tel: +49 (0) 1 80-534 16 80

National Semiconductor Asia Pacific Customer Response Group
Tel: 65-2544466
Fax: 65-2504466
Email: sea.support@nsc.com

National Semiconductor Japan Ltd.
Tel: 81-3-5620-6175
Fax: 81-3-5620-6179

PrintDate=1998/05/29 PrintTime=12:58:31 41665 ds005779 Rev. No. 3 cmserv **Proof** 6