Magnetowid Panasonic NV-L25EE (multi decoder)

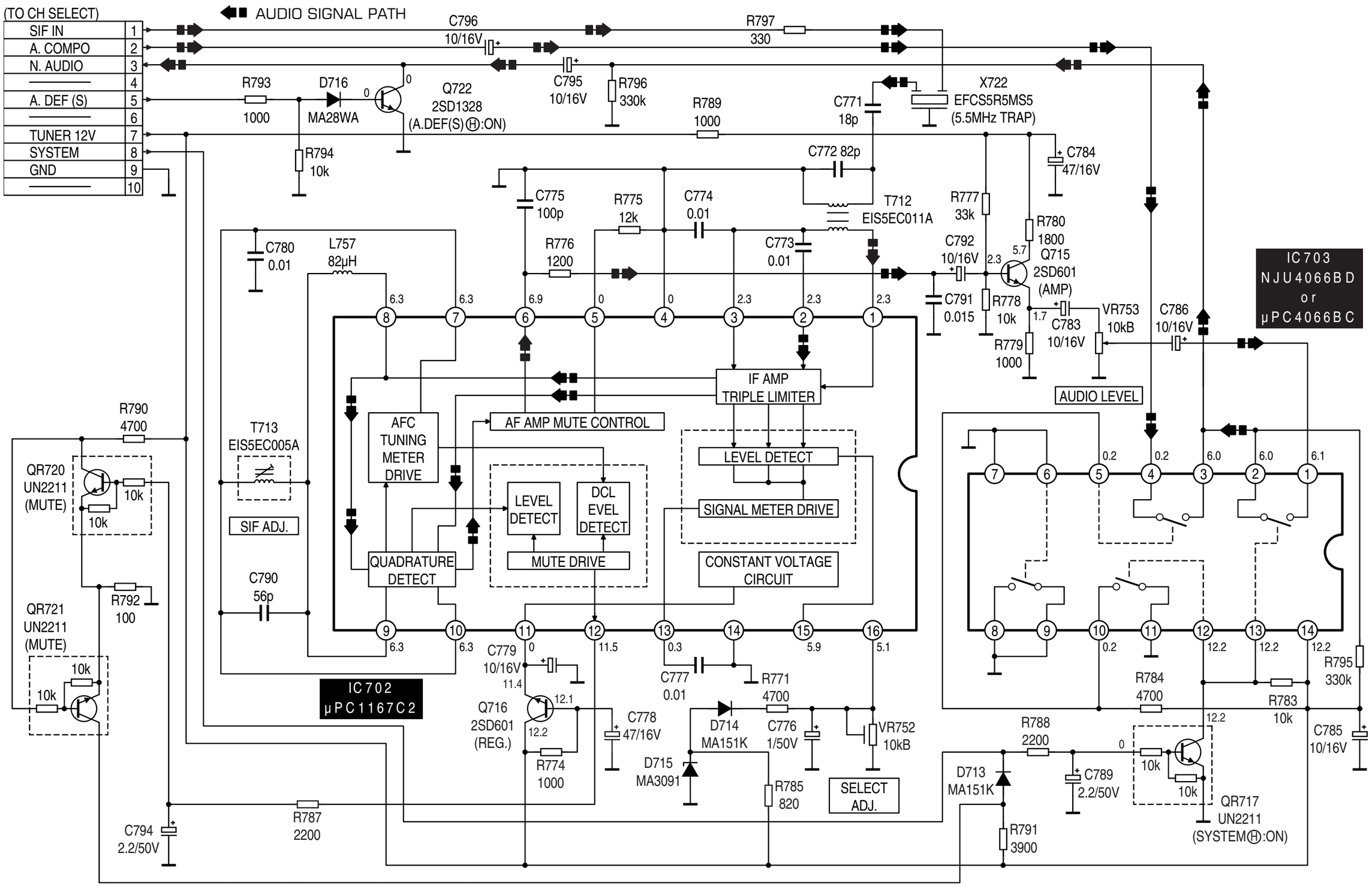

Note: The measurement mode of the DC voltage on this diagram is stop mode.